REV	DESCRIPTION	DET	DATE
G	UPDATE DRAWING FORMAT, ITEM 4, DRIVING ANVIL 117841 WAS 117564, NOTE 1, OFFER DRIVING ANVIL 117564 AS OPTION	EL	07/30/19

NOTES:

Ⓖ ⚠1 CONCAVE INSERT OPTIONALLY AVAILABLE, PART# 117564

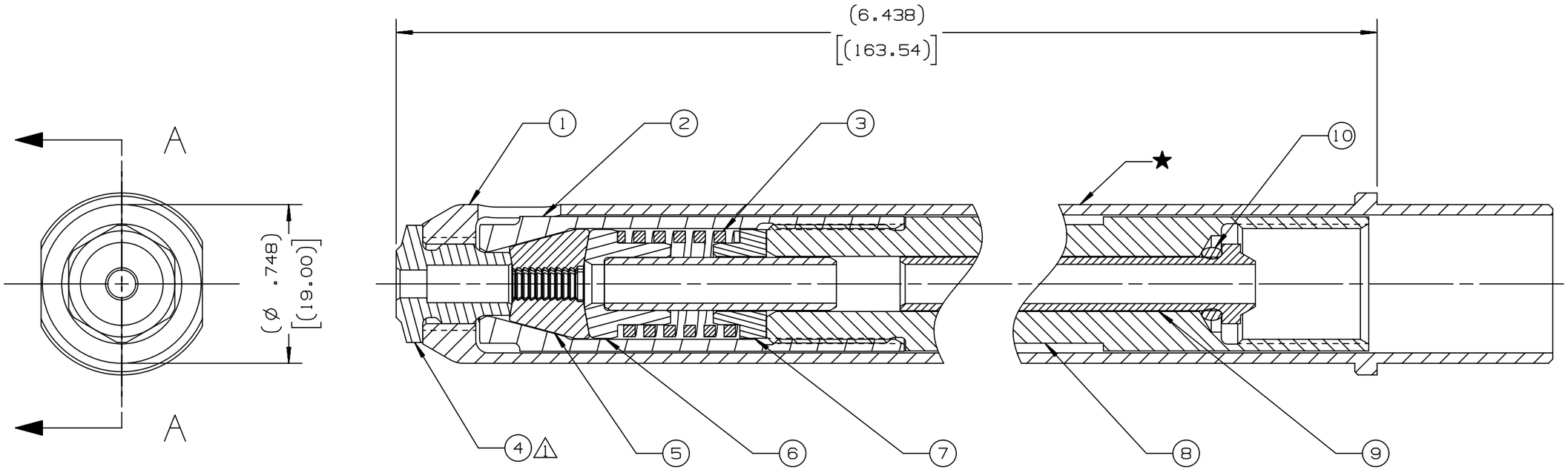

SECTION A-A

	PART NO.	QTY	DESCRIPTION	ITEM
	500775	1	O-RING	10
	122023-1	1	PINTAIL TUBE	9
	125802	1	EXTENSION	8
	116912	1	CAP	7
	116911	1	FOLLOWER	6
	128346	1	CHUCK JAWS	5
Ⓖ	117841	1	ANVIL INSERT	4
	123877	1	SPRING	3
	116909	1	COLLET	2
	116910-1	1	ANVIL HOLDER	1

IDENTIFICATION PER SPEC 42-311: ★ ETCH

HUCK INTERNATIONAL, INC., I.S.D
1 CORPORATE DR
KINGSTON, NEW YORK 12401

ITAR/ECCN: EAR99

NOSE ASM -06 MGL LONG

SCH B#: 8467.99.0190

FINAL ASSY: -

ENG: NDG CK: DATE: 11/02/05 SCALE: 2:1

HTS: 8467.99.0190

B

99-3304L

By accepting this proprietary Huck drawing, recipient agrees not to reproduce or disclose any part therof to any other without the written permission of Huck International,Inc.