715F Series

Features
Max. tensile strength 700 N, working load 600 N.
Easy and economic clip-in installation for stud and receptacle.
Also suitable for automatic installation.
1/4 turn to open - close by a push of the finger.
Due to their small size they are particularly suited for use in electrical engineering and electronics.

Selection Instructions
1. Select stud assembly according to panel thickness P, page L-2 and spring clip according to frame thickness F, page L-3.
2. Select stud length number form panel thickness G using the table below, insert into stud part number * (e.g. 715S12-*-1BP).

Part no. example
Stud, slotted recess head

715 S12 -07 -3BP

- Material / Finish
- Panel thickness P
- Length No.
- Style
- Series

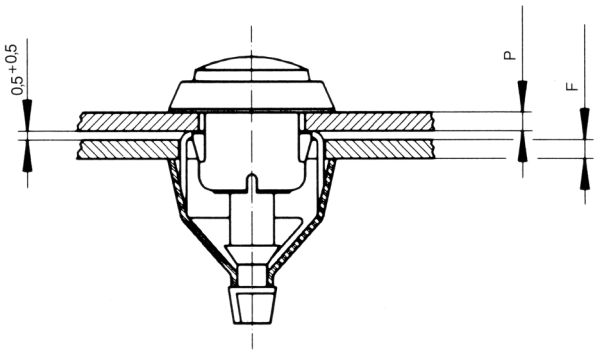

Stud Length Table

Panel Thickness P	Slotted Recess Head Stud Length No.	Knurled Head Stud Length No.	Panel Thickness P	Slotted Recess Head Stud Length No.	Knurled Head Stud Length No.
0,50 - 1,25	5	5	6,50 - 7,25	13	-
1,25 - 2,00	6	6	7,25 - 8,00	14	-
2,00 - 2,75	7	7	8,00 - 8,75	15	-
2,75 - 3,50	8	8	8,75 - 9,50	16	-
3,50 - 4,25	9	9	9,50 - 10,25	17	-
4,25 - 5,00	10	10	10,25 - 11,00	18	-
5,00 - 5,75	11	-	11,00 - 11,75	19	-
5,75 - 6,50	12	-	11,75 - 12,50	20	-

Other lengths on request.

Style	Dimensions	Materials / Finish	Panel Thickness P	°C	Part No.
Slotted Recess Head	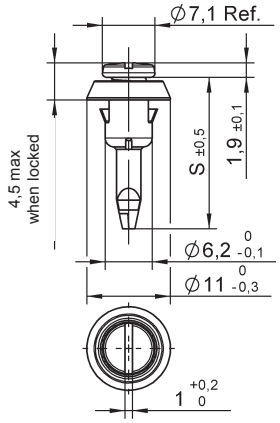 S = 13,25 + (0,75 x length no.)	Stainless steel Spring cup: Plastic (POM) / black	0,5 - 1,0 1,0 - 1,5 1,5 - 2,0	-25 up to +90	**715S12- *-1BP** **715S12- *-2BP** **715S12- *-3BP**
Knurled Head	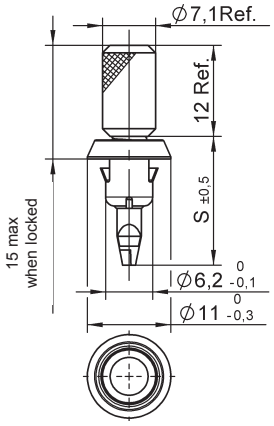 S = 13,25 + (0,75 x length no.)	Stainless steel Spring cup: Plastic (POM) / black	0,5 - 1,0 1,0 - 1,5 1,5 - 2,0	-25 up to +90	**715S13- *-1BP** **715S13- *-2BP** **715S13- *-3BP**

Stud Installation Instructions

Installation Dimensions

Panel up to 2 mm

Panel over 2 mm

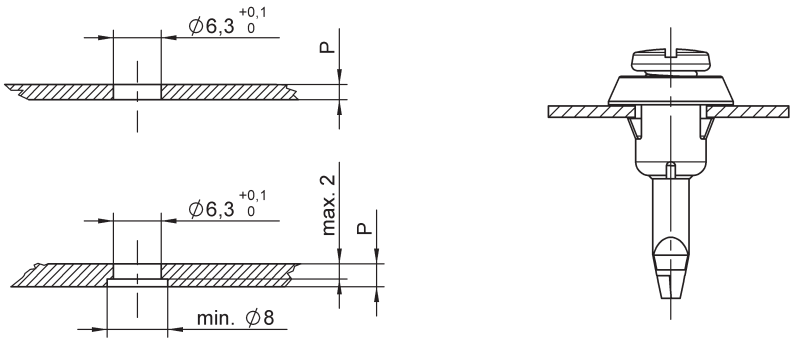

Style	Dimensions	Materials / Finish	Frame Thickness F	°C	Part No.
Receptacle	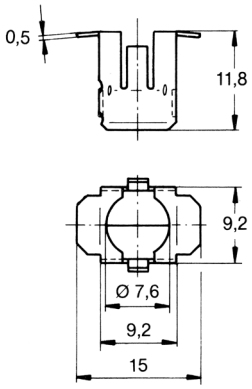	Stainless steel	0,5 - 1,0	-25 up to +90	**715R02-1BP**
			1,0 - 1,5		**715R02-2BP**
			1,5 - 2,0	(See stud assembly)	**715R02-3BP**
			2,0 - 2,5		**715R02-4BP**

Installation Instructions
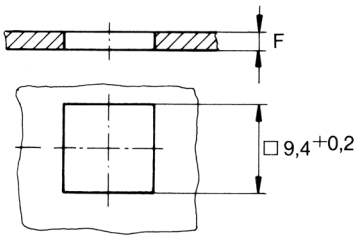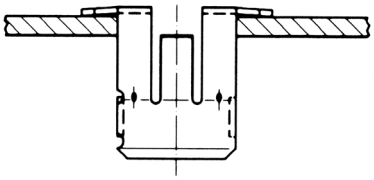
Installation Dimensions